By the Way
Wedding Cake Guide

We **LOVE** making wedding cakes!

“Several guests told us it was the best wedding cake they'd ever eaten, AND no one knew it was gluten- and dairy-free. I would recommend BTW Bakery to anyone, regardless of their dietary limitations or lack thereof. Fabulous, fabulous, fabulous.” – Ariel S.

"We couldn't be happier with every aspect of our wedding day, and the best part was that we were able to indulge in the most amazing cake. Our guests couldn't even tell that it was gluten-free. It was devoured by the end of the weekend's wedding festivities! We couldn't have imagined our wedding without By the Way Bakery." – Stacey W.

"By the Way Bakery is THE place to get your wedding cake. Their cakes are delicious, the staff helpful and caring, and their professionalism is top notch.” – Lindsey W.
We can’t wait to make yours!

Warmly,

Helene

Helene Godin
Founder & CEO
By the Way Bakery

What you need to know about our wedding cakes…

Whether you're having an intimate wedding or a wedding with hundreds of guests, a wedding cake from By the Way Bakery is always beautiful and delicious.

Our tiered wedding cakes start at $8 per slice (see pages 15-16 for sizes), with an additional charge for decorations. The decorating fee is design-driven. A wedding cake featuring many design elements, e.g. sugar flowers and fondant details, will cost more than a simple cake with fresh flowers added at the venue by the florist.

The size of the wedding cake depends on several factors: the number of guests, whether you're serving other desserts, and the look you want for the reception and the photos. Your budget may also be a factor. You can always reduce the size of the tiered cake and order sheet cakes at our standard prices for serving additional slices from the kitchen.

Delivery is available for an additional charge for wedding cake orders that exceed $450. The delivery fee is based on the day and time of the delivery, as well as the distance from our commissary kitchen in Pleasantville, New York, where we do all of our baking.

Love

Always

by the way
BAKERY

It All Begins with a Great Cake!

Whether your wedding cake design is modern or traditional, classic or whimsical, a By the Way Bakery wedding cake is certain to impress your guests.

All of our cakes are gluten-free, dairy-free, and kosher pareve. Most important, all BTW cakes are delicious – as good as, if not better than, their conventional counterparts.

To make your cake truly special, we offer a selection of layers, fillings, and frostings –

- **Layers**: chocolate, coconut, lemon, red velvet, spiced carrot, or vanilla
- **Fillings**: chocolate, “cream cheese”, latte, lemon curd, raspberry jam, vanilla bean, or vanilla chiffon
- **Frosting**: most of the cakes shown in our Wedding Cake Guide are covered in our vanilla chiffon frosting, but our chocolate, lemon and vanilla bean frostings are also great finishes on a wedding cake

Let us know what we can create for your wedding!

Tiered Cake Sizes & Prices

(pricing does not include the cost of custom decorations)

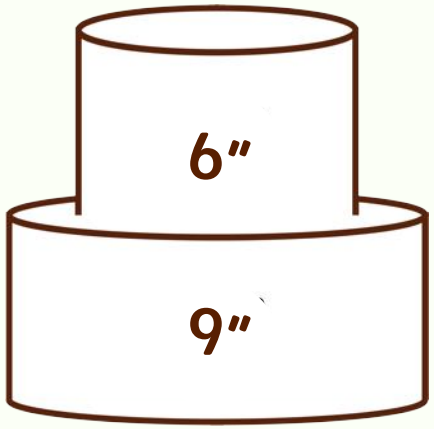

32 Servings
$250

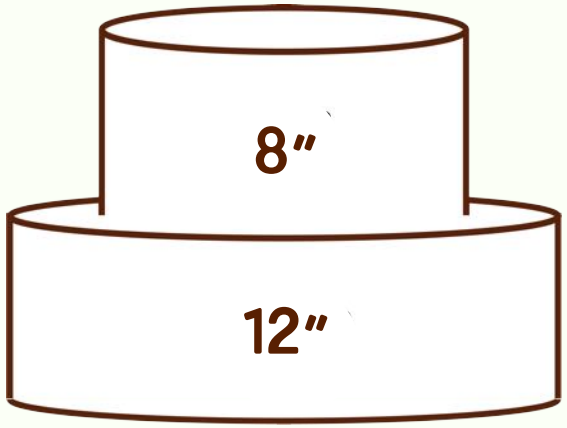

68 Servings
$540

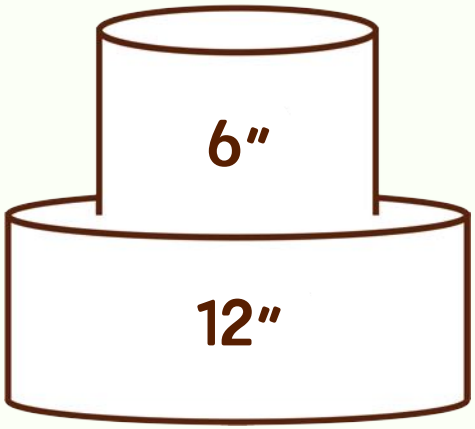

40 Servings
$320

Serving calculations are approximate.

Tiered Cake Sizes & Prices

(pricing does not include the cost of custom decorations)

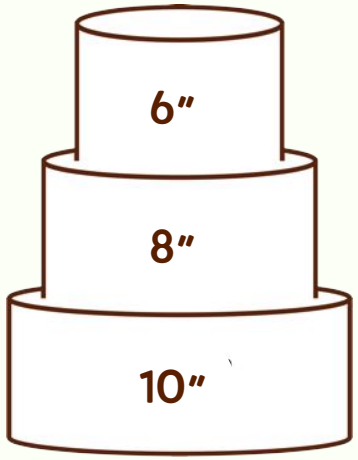

60 Servings
$480

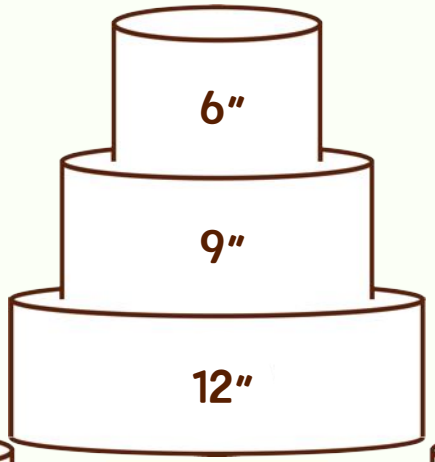

75 Servings
$600

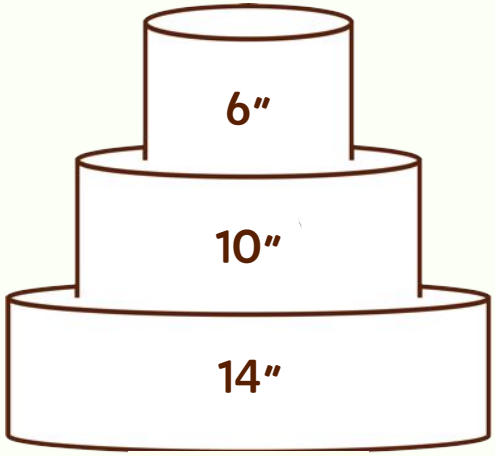

100 Servings
$800

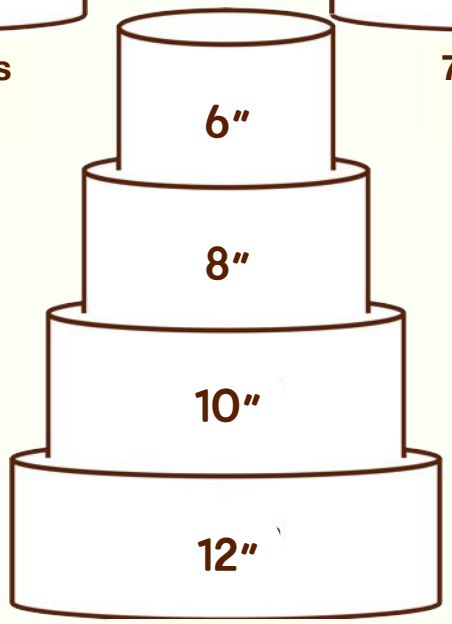

105 Servings
$840

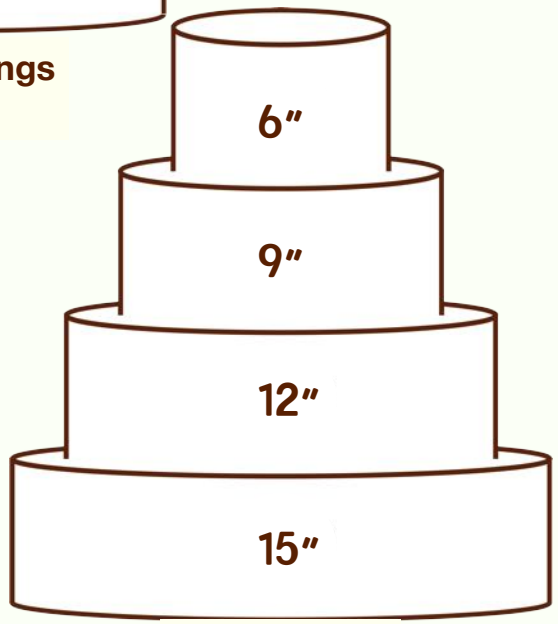

160 Servings
$1280

Serving calculations are approximate.