Documnt Number：DDS-13-010

DRV060-CV-R03-GAD CVBS Drive Board
User manual
Ver 1.0

For Products:

SVGA060SC — Full Color

SVGA060SW — Monochrome White

SVGA060SG — Monochrome Green

May 14, 2013

Record of Revision

Revision	Revise Date	Page	Content
Ver 1.0	May 14,2013		Initial release .

DRV060-CV-R03-GAD CVBS Drive Board

User manual

Features

- **Multi-format composite video input(default is PAL)**
- **Low power consumption**
- **Industrial temperature grade**（-40℃~+65℃）
- **Custom Re-configurable**

General description

DRV060-CV-R03-GAD is an analog composite video input driver board for SVGA060 OLED microdisplay. The low power consumption decoder can automatically detects and converts standard analog baseband television signals compatible with worldwide NTSC, PAL, and SECAM standards into digital YCbCr 4:2:2 component video data compatible with the 8-bit ITU-R BT.656 interface standard. Default driver board setting is PAL input, and the resolution is 768x576, support mono or color signal.

It allow user to adjust the brightness, contrast of the Display by serial communication interface . One CMOS standard serial communication interface allow user to configure all register of the decoder and display. So user can re-configure the driver board flexible.

Low-noise, low-dropout DC/DC convertor can support 5V input voltage.

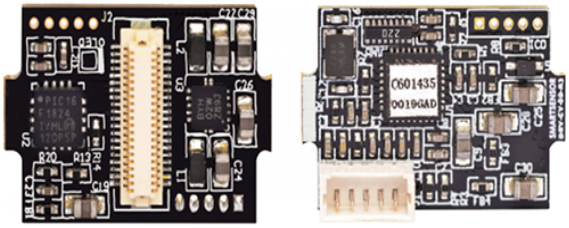

Power and consumption

Input voltage	DC 5V±0.2V
Typical power consumption	500mW (Include display)

Input video signal

Video signal	Composite video
Voltage level	0～1.0 Vpp
Input resistor	75Ω
Output (PAL)	768×576

Interface (3.3V CMOS standard)

I/O definition (active low)	Function
TxD/RxD	CMOS 3.3V RS232 interface
COMS Setting	9600/N/8/1

Mechanic dimension

Dimension (L×W)	20mm×15mm
Refer to Mechanical characteristics	

Interface and pin definition

No.	Name	Function	Voltage level
1	CV+	Video Input +	0～1.0 Vpp
2	Gnd	Video Input GND	0V
3	RxD	RS232 Received Pin	0/3.3V
4	GND	Power Gnd	0V
5	Vin	Power Input	5V

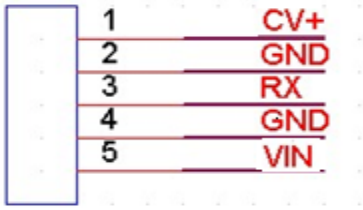

5Pin Connector

Note：1. It remarks the first pin as 1 in the Connector. Which is 53047-0510, it is made by Molex.

Communication description

Communication interface support master controller to read/write the register value of Display, Decoder and EEPROM. The change of the Decoder and Display will effect immediately, but when power down or reset, it will lost. The change of the EEPROM is equal to modify the default setting, will effect after power up in next time or reset. We have to make a board which used for voltage transform like below max3232 ：

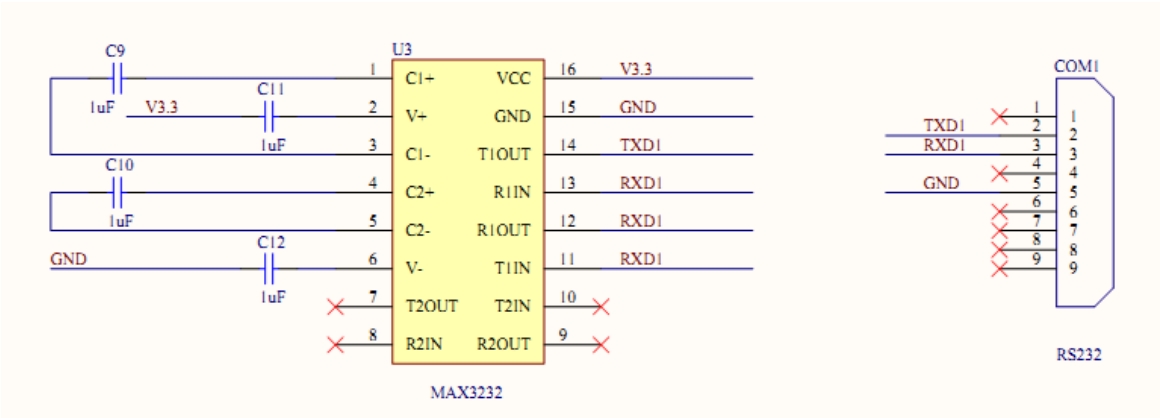

Note: *RxD and TxD pin are work in COMS 3.3V standard, it cannot connect to PC RS232 port directly.*

Because this board only have RxD pin ,it could write the register and can't read the register .

Every command must be sending in 600ms and total bytes must be less than 64 bytes, otherwise, will receive the error code.

Common Command

(1) Modify the brightness of display 02 24 03 00 XX 03

(XX is the value which we need to set, Which range is 00H~FFH, and the 00H is more dark than FFH.)

Note: After send this command, the brightness change of the Display will effect immediately, it save the setting in EEPROM at the same time.

(2) Open temperature compensate(TC) 02 43 03 01 00 03

Close temperature compensate (TC) 02 43 03 00 00 03

Note: The setting will effect immediately, but when power down or reset, it will lost. If you want to save the setting of TC, please modify the register DEH and D0H,D0H is the checksum register.)

(3) Resume the factory setting 02 80 03 00 00 03

(4) Reset 02 55 03 00 00 03

Communication mnemonic symbol

Mnemonic	Code(Hex)	Signification
STX	02h	Start symbol
ETX	03h	End symbol
ACK	06h	ACK symbol
NAK	07h	NAK symbol
CMD	00h	Read soft version
	11h	Read Display
	12h	Read Decoder
	13h	Read EEPROM
	21h	Write Display
	22h	Write Decoder
	23h	Write EEPROM
	24h	Write Brightness of display
	30h	Switch PAL to NTSC
	31h	Switch NTSC to PAL
	41h	Reset display
	42h	Reset decoder
	43h	Open/Close temperature compensate
	55h	Reset
	80h	Resume factory setting

Error Code		Signification
Mnemonic	Code(Hex)	
Err_Head	F0h	Start symbol error
Err_End	F1h	End symbol error
Err_CMD	F2h	CMD symbol error
Err_DateLen	F3h	Data Length error
Err_Frame	F4h	Frame error
Err_FIFO	F5h	FIFO overflow
Err_RxProc	F6h	CMD process error
Err_TimeOut	F7h	CMD timeout
Err_Waiting	F8h	CMD not finished
Err_Unknow	FFh	Unknown CMD

Communication command formatting

Send: STX + CMD +DataLen + Data + ETX

DataLen

Response: STX + CMD + DataLen + ACK/NAK + Data + ETX

DataLen

Command usage

1. Write Command (6 ≤ Total Bytes ≤ 64)

Send:

STX	CMD	Length	Add0	Data0	……	Addn	Datan	ETX
02	21/22/23	03~3C	00~FF	00~FF	……	00~FF	00~FF	03

Succeed Response:

STX	CMD	Length	ACK	ETX
02	21/22/23	02	06	03

Error Response:

STX	ErrCode	Length	NAK	ETX
02	F0~FF	02	07	03

Write command example:

Write Display register (01H) = 41H, (19H) = A0H: 02 21 05 01 41 19 A0 03

MECHANICAL CHARACTERISTICS

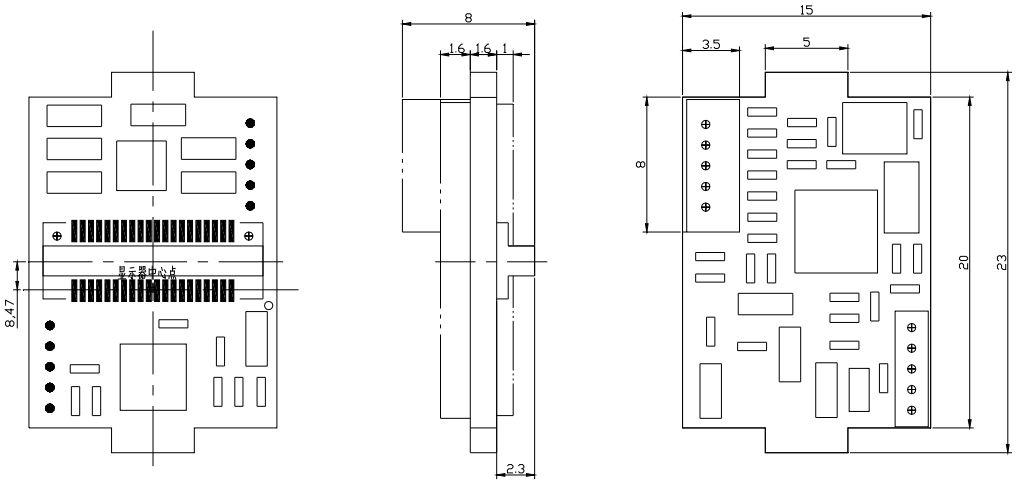

Diagram of mechanism

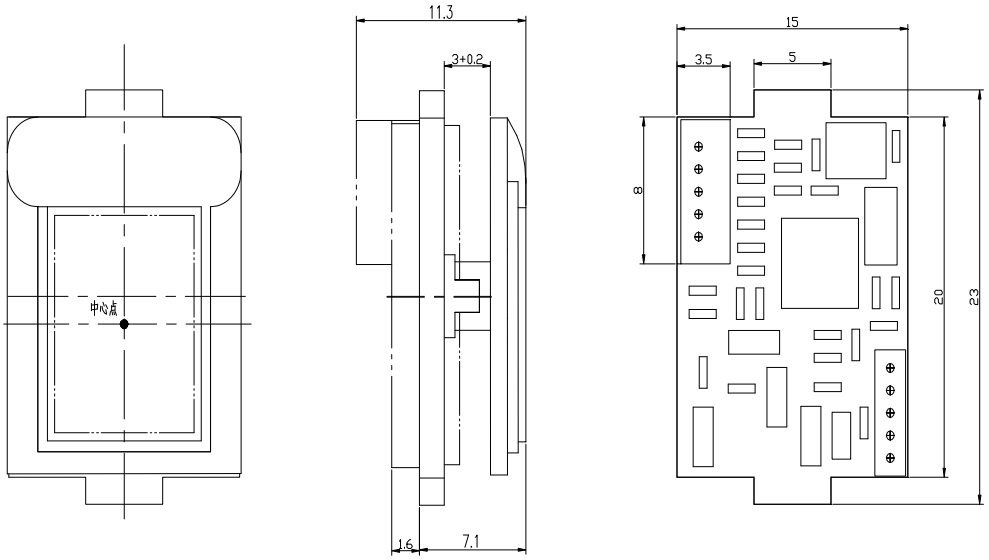

Installation diagram with OLED