# Assessing brain-behavior interactions and individual variability in the development of perspective taking in adolescent girls*

Guazzelli Williamson, V.[1], Barendse, M. E. A.[1], Chavez, S. J.[1], Cheng, T. W.[1], Cosme, D.[2], Byrne, M. L.[1], , Mills, K. L.[1], & Pfeifer, J. H.[1]
[1]Developmental Social Neuroscience Lab, Department of Psychology, University of Oregon [2]Annenberg School for Communication, University of Pennsylvania

## INTRODUCTION

Research suggests that perspective-taking and its neural foundations are developing during adolescence.

Understanding both individual differences in, and developmental changes in, perspective-taking tendencies as they relate to neural activation of mentalizing regions during social-self-evaluation may offer a novel means of understanding pathways to, and individual differences in, health and well-being in adolescence.

**Preregistered hypotheses**

1a. Tendency to take others' perspectives (as assessed by IRI-PT scores) will be positively associated with age using data from waves 1 and 2.
1b. Activation in mentalizing regions during social-self-evaluation will be positively associated with age using data from waves 1 and 2.
2. Adolescents with greater perspective-taking tendencies (as assessed by IRI-PT scores) will display greater activation in mentalizing regions during social-self-evaluation.
3. Latent changes in tendencies to take others' perspective-taking will correlate positively with latent changes in neural activation of mentalizing regions during social self-evaluation.

## METHODS

**Participants**

- 173 girls* at both waves, 10-14.5 years old, community sample (*at study enrolment 3 identified as non-binary)
- Two waves: 18 months apart

Public preregistration: https://osf.io/xmb9w/

**Measures**

- Age
- Interpersonal Reactivity Index- Perspective Taking subscale
- Self-evaluation fMRI task: prosocial, antisocial, and social status adjectives

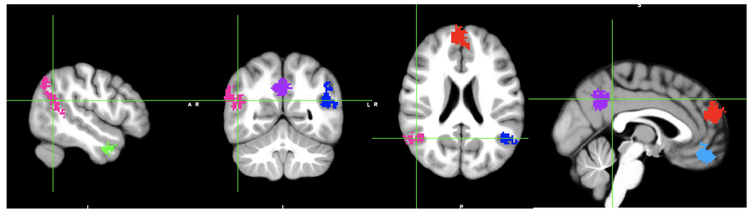

**ROI selection**

Neural ROIs calculated by binarizing the "Mentalizing: Association Test" layer from neurosynth at z = 5 and selecting only regions with 66+ contiguous voxels that are reliably activated in reflected self-appraisals. This resulted in 5 ROIs to be included in our analyses: dmPFC, vmPFC, rTPJ, lTPJ, & precuneus.

For hypothesis 3, a latent variable of mentalizing neural activity comprised of activity in all 5 ROIs was used as the neural activation variable in the bivariate latent change score model.

**Statistical Analysis**

Mixed effects models with random intercepts for each participant were used to assess hypothesis 1a, 1b, and 2. The equations are presented below
Hypothesis 1a: IRI-PT ~ age + (1 | ID)
Hypothesis 1b: ROI ~ age + (1 | ID)
Hypothesis 2: ROI ~ IRI-PT + (1 | ID)
For hypothesis 3, a bivariate latent change score model based on Kievit et al., 2017 was used.

## RESULTS

### Hypothesis 1a and 1b: Associations with age

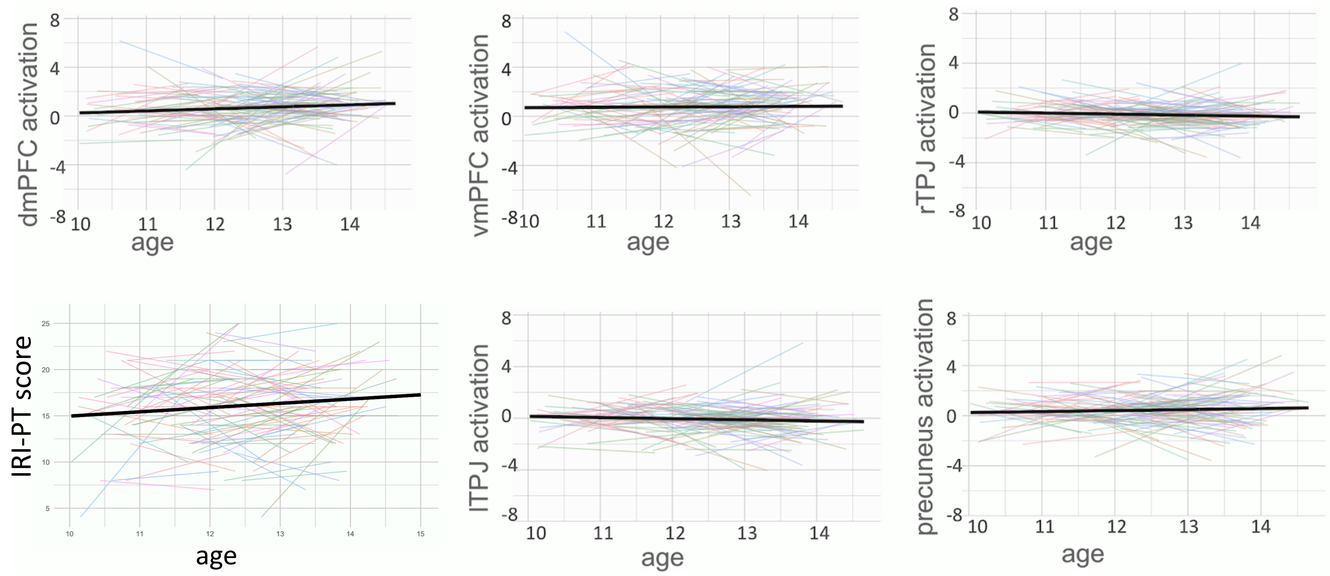


### Hypothesis 3: Bivariate Latent Change Score Model

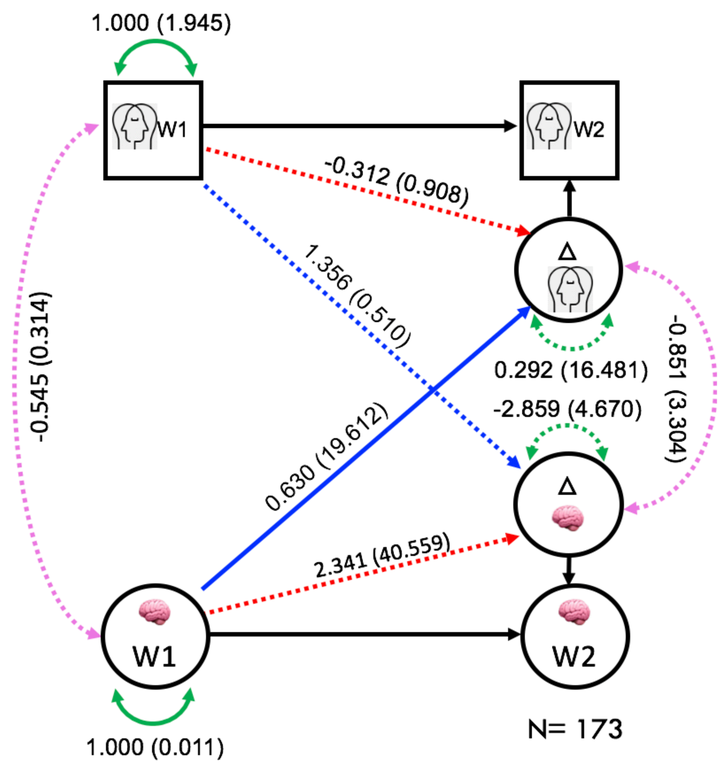


## DISCUSSION

- **Hypothesis 1a:** IRI-PT significantly associated with age (β = 0.134, p = 0.020) but there appears to be significant individual variability in these relationships.
- **Hypothesis 1b:** dmPFC activity moderately correlated with age (β = 0.022, p = 0.046) but not significant at α < 0.01.
- **Hypothesis 2:** Associations between IRI-PT score and ROI activation were non-significant for all ROIs
- **Hypothesis 3:** Our model suggests that those with higher activity of the latent mentalizing neural variable at the first wave see greater growth or developmental change in self-reported perspective taking tendencies between the waves.

**Additional Considerations & Future Directions:**

- Girls only, association with ROIs could be present in boys.
- Longitudinal follow-up needed. Waves 3 and 4 in progress.
- Replication with voxel-wise whole brain neural signature of mentalizing.

UNIVERSITY OF OREGON
@vicgwilli
vgw@uoregon.edu