(120 Ah 12V)

GENERAL PURPOSE BATTERIES

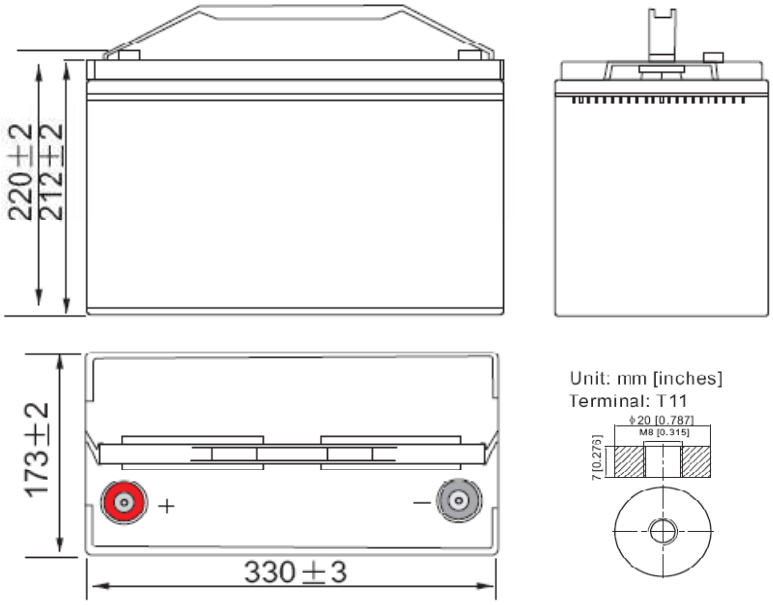

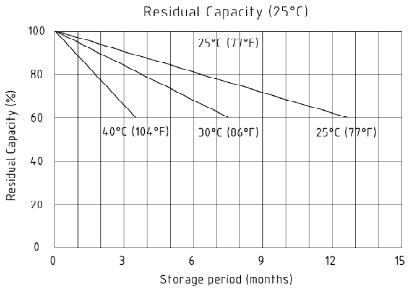

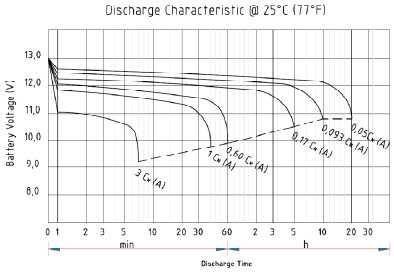

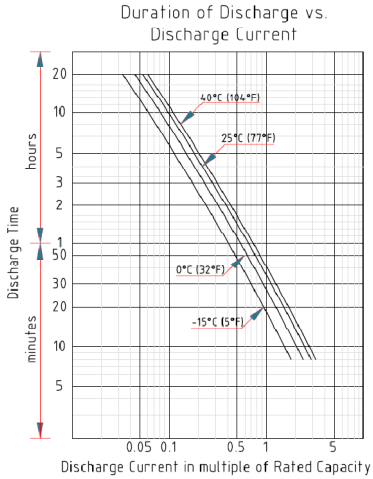

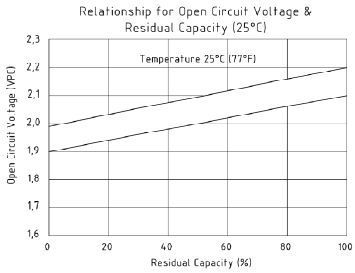

Specification

Nominal Voltage	12 V
Nominal Capacity (20 Hr)	120Ah
Dimension	Length 330±3 mm (12,99 inches) Width 173±2 mm (6,81 inches) Container Height 212±2 mm (8,35 inches) Total Height (with terminal) 220±2 mm (8,66 inches)
Approx Weight	Approx 30,0 kg (66,15 lbs)
Terminal	T11
Container Material	ABS
Rated Capacity	119,6 Ah / 5,98A (20 hr, 1,80 V/cell, 25°C/77°F) 115 Ah / 11,5A (10 hr, 1,80 V/cell, 25°C/77°F) 98,7 Ah / 19,74A (5 hr, 1,75 V/cell, 25°C/77°F) 89,7 Ah / 29,9A (3 hr, 1,75 V/cell, 25°C/77°F) 70,15 Ah / 70,15A (1 hr, 1,60 V/cell, 25°C/77°F)
Max Discharge Current	1.350,0 A (5 s)
Internal Resistance	Approx 3,9 mΩ
Operating Temperat. Range	Discharge : -15÷50°C (5÷122°F) Charge : 0÷40°C (32÷104°F) Storage : -15÷40°C (5÷104°FR)
Nominal Operating Temp. Range	25±3°C (77±5°F)
Cycle Use	Initial Charging Current less than 24 A Voltage 14,4÷15,0V at 25°C (77°F)Temperature Coefficient -30mV/°C
Standby Use	No limit on Initial Charging Current Voltage 13,5÷13,8 V at 25°C (77°F) Temperature Coefficient - 20mV/°C
Capacity affecred by Temperature	40°C (104°F) 103% 25°C (77°F) 100% 0°C (32°F) 86%
Self Discharge	batteries may be stored for up to 6 months at 25°C (77°F) and then a freshening charge is required. For higher temperatures the time interval will be shorter.

Constant Current Discharge (Amperes) at 25°C (77°F)

F.V / Time	10 min	15 min	20 min	30 min	45 min	1 h	2 h	3 h	4 h	5 h	6 h	8 h	10 h	20 h
1,85V / cell	154,8	131,6	110,1	87,5	66,2	54,2	34,5	27,3	22,3	18,0	15,6	12,8	10,8	5,92
1,80V / cell	197,7	159,0	130,1	103,2	77,1	60,8	37,7	29,4	23,8	19,3	16,8	13,5	11,5	5,98
1,75V / cell	217,3	173,7	140,0	107,1	79,9	63,5	39,1	29,9	24,3	19,7	17,3	13,7	11,6	6,04
1,70V / cell	236,8	185,4	147,1	111,6	83,1	65,6	40,6	30,8	25,0	20,3	17,6	13,9	11,7	6,15
1,67V / cell	246,2	191,3	151,7	114,6	84,1	66,7	41,2	31,4	25,4	20,6	17,8	14,0	11,8	6,19
1,65V / cell	255,6	197,1	156,3	117,7	85,2	67,8	41,8	32,1	25,9	20,9	18,0	14,1	12,0	6,23
1,60V / cell	277,4	210,8	166,5	124,2	88,7	70,2	43,2	33,1	26,6	21,6	18,4	14,3	12,1	6,27

Constant Power Discharge (Watts) at 25°C (77°F)

F.V / Time	10 min	15 min	20 min	30 min	45 min	1 h	2 h	3 h	4 h	5 h	6 h	8 h	10 h	20 h
1,85V / cell	307,91	262,69	220,68	176,31	133,54	109,05	68,91	54,16	44,12	35,58	30,95	25,16	21,53	11,70
1,80V / cell	395,73	318,16	260,87	207,39	155,68	122,67	75,32	58,32	47,09	38,15	33,16	26,62	22,77	11,80
1,75V / cell	436,44	348,96	281,96	216,04	161,76	128,94	78,33	59,65	48,24	39,12	33,94	27,09	23,00	11,91
1,70V / cell	474,52	373,45	298,57	226,42	169,38	133,85	81,68	61,43	49,00	40,15	34,75	27,54	23,24	12,21
1,67V / cell	496,40	387,90	314,40	233,80	172,50	136,50	83,10	62,70	49,30	40,90	35,30	28,00	23,50	12,26
1,65V / cell	516,51	400,61	319,17	239,54	173,52	138,24	83,94	63,96	51,27	41,17	35,54	28,15	23,78	12,31
1,60V / cell	553,19	425,09	338,87	252,44	180,40	142,98	86,65	65,92	52,84	42,60	36,35	28,25	24,01	12,41